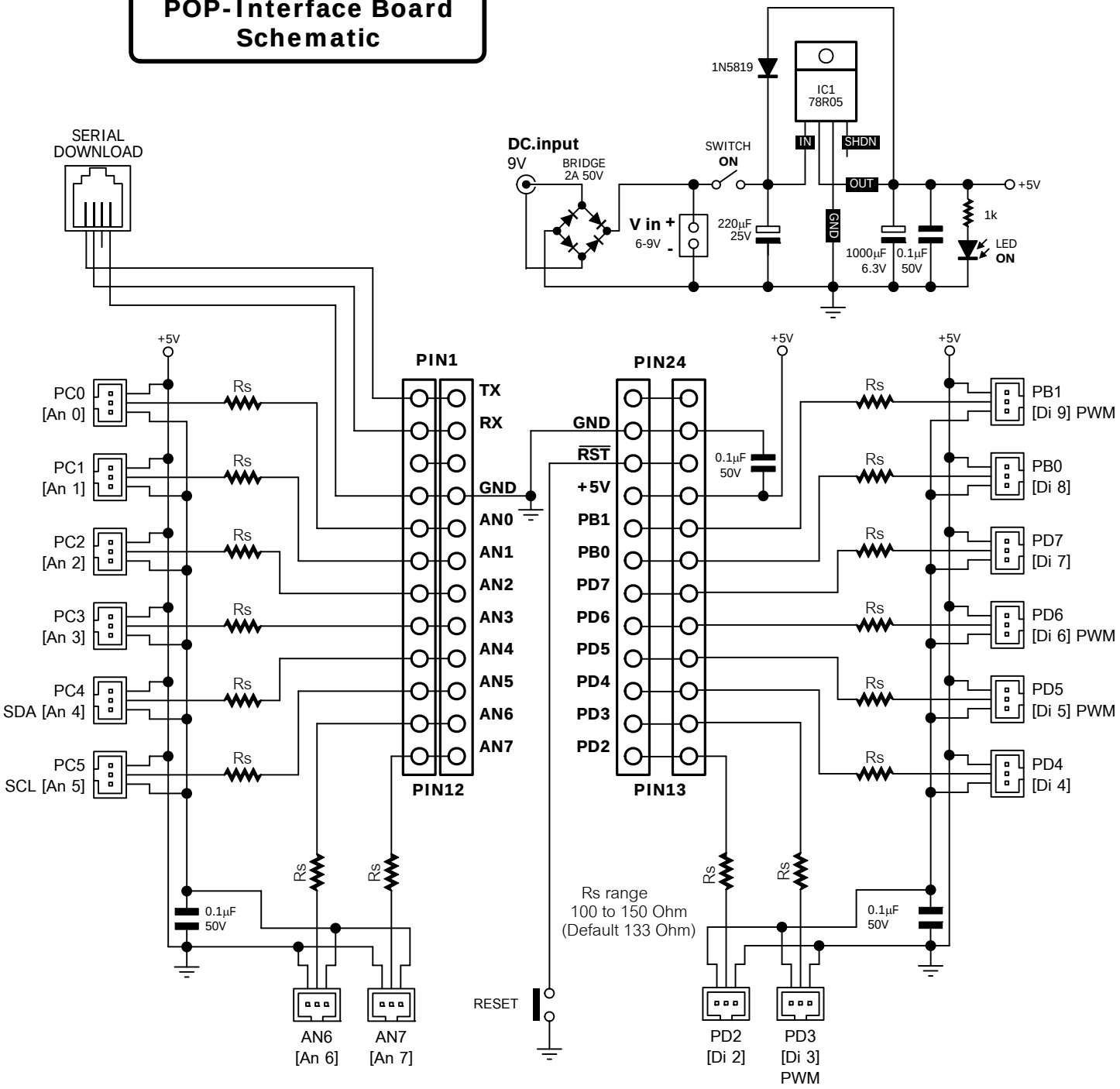POP-Interface Board Schematic