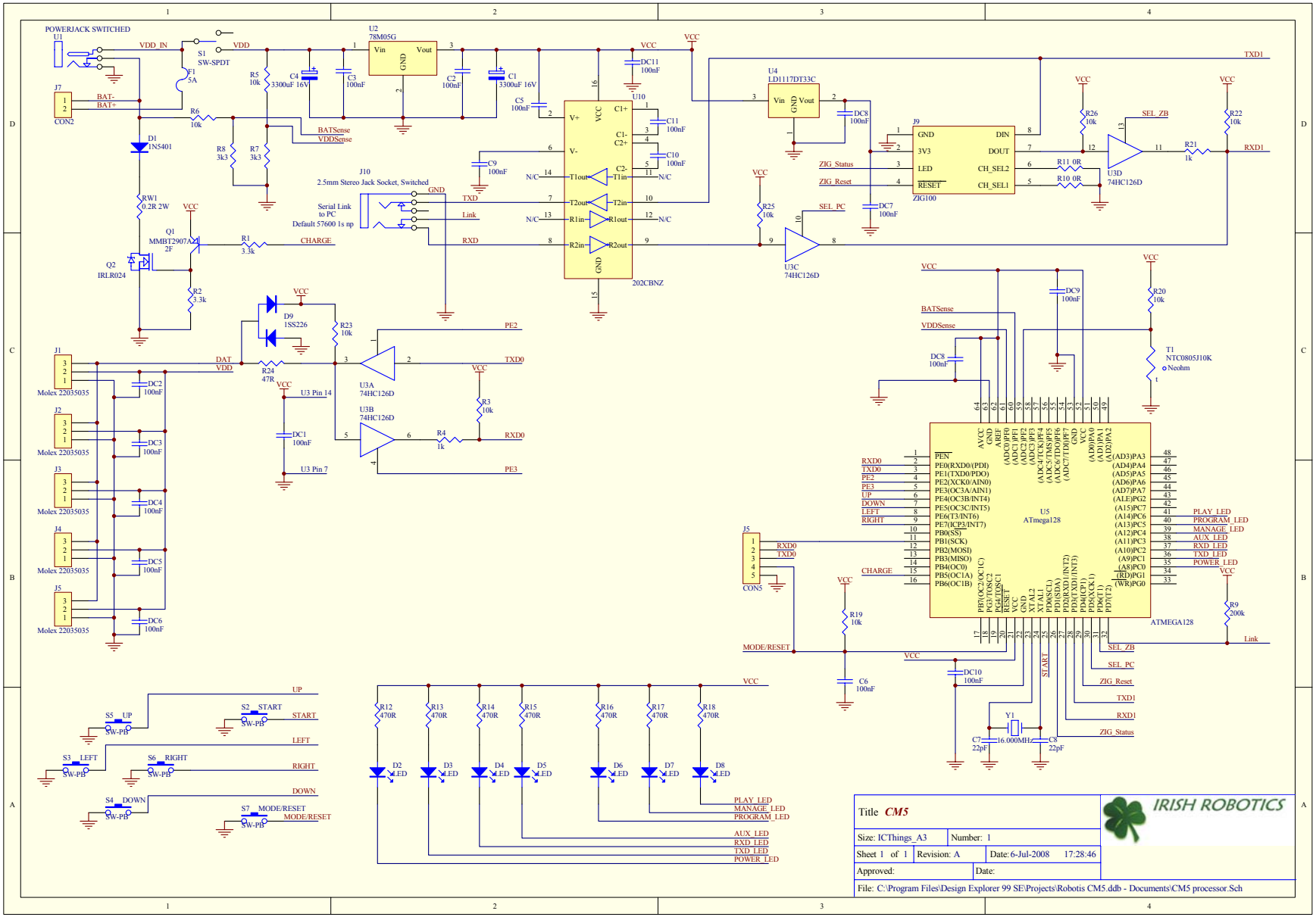
POWERJACK SWITCHED
U1
VDD_IN
S1
SW-SPDT
VDD
F1
5A
J7
CON2
BAT-
BAT+
R6
10k
D1
1N5401
RW1
0.2R 2W
Q1
MMBT2907A
2F
Q2
IRLR024
R1
3.3k
R2
3.3k
CHARGE
R5
10k
R8
3k3
R7
3k3
C4
3300uF 16V
C3
100nF
U2
78M05G
Vin
Vout
GND
C2
100nF
C1
3300uF 16V
C5
100nF
BATSense
VDDSense
VCC
DC11
100nF
U10
202CBNZ
C9
100nF
C11
100nF
C10
100nF
J10
2.5mm Stereo Jack Socket, Switched
Serial Link
to PC
Default 57600 1s np
GND
TXD
Link
RXD
U4
LD1117DT33C
DC8
100nF
J9
ZIG100
GND
3V3
LED
RESET
DIN
DOUT
CH_SEL2
CH_SEL1
ZIG_Status
ZIG_Reset
DC7
100nF
R25
10k
SEL_PC
U3C
74HC126D
R26
10k
R11 0R
R10 0R
U3D
74HC126D
SEL_ZB
R22
10k
R21
1k
RXD1
TXD1
D9
1SS226
R23
10k
R24
47R
DAT
VDD
U3A
74HC126D
U3B
74HC126D
U3 Pin 14
U3 Pin 7
DC1
100nF
R3
10k
R4
1k
PE2
TXD0
RXD0
PE3
J1
J2
J3
J4
J5
Molex 22035035
DC2
100nF
DC3
100nF
DC4
100nF
DC5
100nF
DC6
100nF
DC9
100nF
R20
10k
T1
NTC0805J10K
Neohm
U5
ATmega128
ATMEGA128
PEN
PE0(RXD0/(PDI)
PE1(TXD0/PDO)
PE2(XCK0/AIN0)
PE3(OC3A/AIN1)
PE4(OC3B/INT4)
PE5(OC3C/INT5)
PE6(T3/INT6)
PE7(ICP3/INT7)
PB0(SS)
PB1(SCK)
PB2(MOSI)
PB3(MISO)
PB4(OC0)
PB5(OC1A)
PB6(OC1B)
AVCC
GND
AREF
(ADC0)PF0
(ADC1)PF1
(ADC2)PF2
(ADC3)PF3
(ADC4/TCK)PF4
(ADC5/TMS)PF5
(ADC6/TDO)PF6
(ADC7/TDI)PF7
GND
VCC
(AD0)PA0
(AD1)PA1
(AD2)PA2
(AD3)PA3
(AD4)PA4
(AD5)PA5
(AD6)PA6
(AD7)PA7
(ALE)PG2
(A15)PC7
(A14)PC6
(A13)PC5
(A12)PC4
(A11)PC3
(A10)PC2
(A9)PC1
(A8)PC0
(RD)PG1
(WR)PG0
PB7(OC2/OC1C)
PG3/TOSC2
PG4/TOSC1
RESET
VCC
GND
XTAL2
XTAL1
PD0(SCL)
PD1(SDA)
PD2(RXD1/INT2)
PD3(TXD1/INT3)
PD4(ICP1)
PD5(XCK1)
PD6(T1)
PD7(T2)
RXD0
TXD0
PE2
PE3
UP
DOWN
LEFT
RIGHT
CHARGE
PLAY_LED
PROGRAM_LED
MANAGE_LED
AUX_LED
RXD_LED
TXD_LED
POWER_LED
J5
CON5
MODE/RESET
R19
10k
C6
100nF
DC10
100nF
R9
200k
Link
SEL_ZB
SEL_PC
ZIG_Reset
TXD1
RXD1
ZIG_Status
START
Y1
16.000MHz
C7
22pF
C8
22pF
S5 UP
S2 START
S3 LEFT
S6 RIGHT
S4 DOWN
S7 MODE/RESET
SW-PB
UP
START
LEFT
RIGHT
DOWN
MODE/RESET
R12
470R
R13
470R
R14
470R
R15
470R
R16
470R
R17
470R
R18
470R
D2
D3
D4
D5
D6
D7
D8
LED
PLAY_LED
MANAGE_LED
PROGRAM_LED
AUX_LED
RXD_LED
TXD_LED
POWER_LED
Title CM5
IRISH ROBOTICS
Size: ICThings_A3
Number: 1
Sheet 1 of 1
Revision: A
Date: 6-Jul-2008 17:28:46
Approved:
Date:
File: C:\Program Files\Design Explorer 99 SE\Projects\Robotis CM5.ddb - Documents\CM5 processor.Sch